RAM S800 Heavy Picture

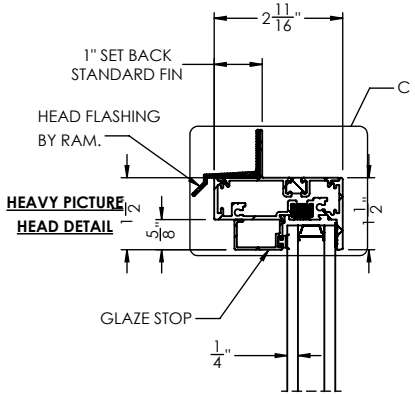

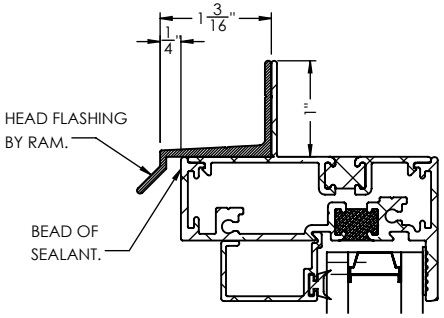

DETAIL C
SCALE 1 : 2

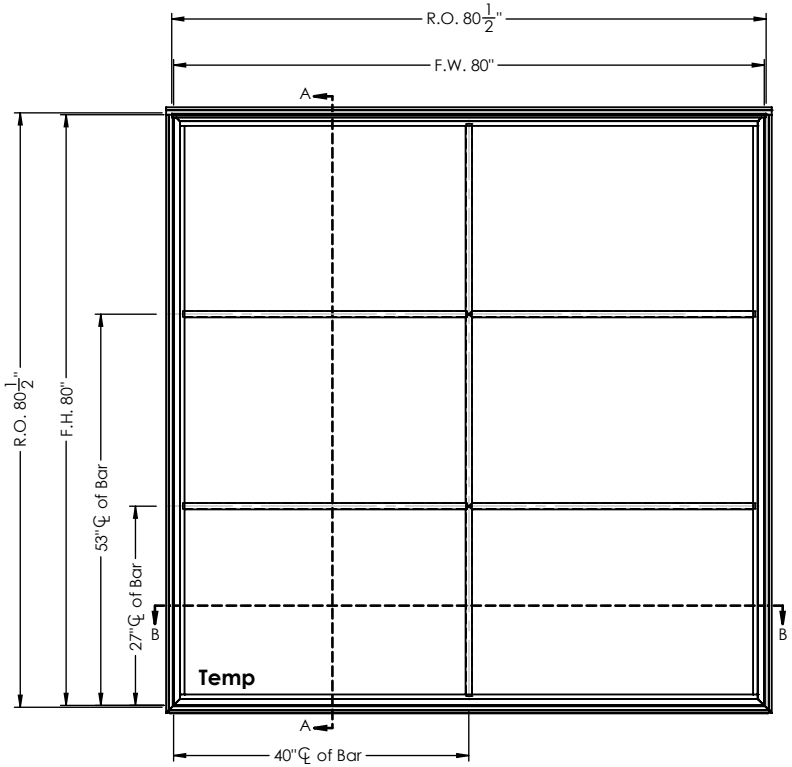

NOTE:
HEAD FLASHING BY RAM,
SILL PAN BY OTHERS.

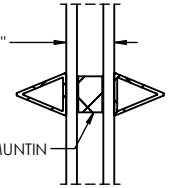

EXTERIOR

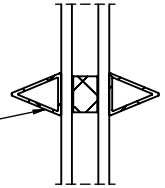

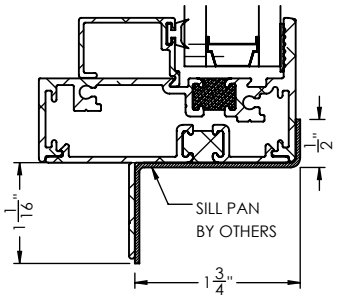

DETAIL D
SCALE 1 : 2

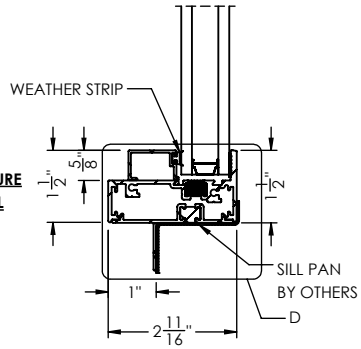

SECTION A-A
SCALE 1 : 4

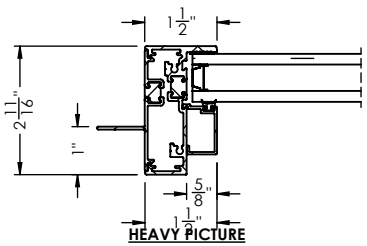

HEAVY PICTURE
LEFT JAMB DETAIL

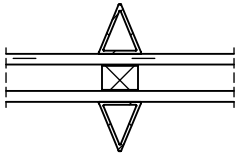

EXTERIOR

SECTION B-B
SCALE 1 : 4

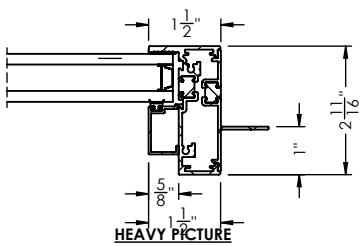

HEAVY PICTURE
RIGHT JAMB DETAIL

DRAWING APPROVAL
- ☐ APPROVED
- ☐ APPROVED AS NOTED
- ☐ REVISE AND RESUBMIT

SIGN _____ DATE _____

Please return one print set marked with your signature, any comments, and notation of approval for fabrication.

REV	DESCRIPTION	BY	DATE
~	~	~	~
~	~	~	~

PROPRIETARY AND CONFIDENTIAL

THE INFORMATION CONTAINED IN THIS DRAWING IS THE SOLE PROPERTY OF RAM INDUSTRIES. ANY REPRODUCTION IN PART OR AS A WHOLE WITHOUT THE WRITTEN PERMISSION OF RAM INDUSTRIES IS PROHIBITED.

RAM INDUSTRIES

LEAD TIME	6-8	WEEKS	CUSTOMER	
GLASS WARRANTY	2	YEARS	PROJECT	
FRAME WARRANTY	2	YEARS	CITY	Houston
FINISH WARRANTY	2	YEARS	STATE	TX
U-FACTOR	0.32		OUTER GLASS	1/4" Cardinal 366 LoE (Temp)
SHGC	0.22		AIR SPACE	1/2" Argon
OA GLASS THICKNESS	1"		INNER GLASS	1/4" Clear (Temp)

UNLESS OTHERWISE SPECIFIED:

DIMENSIONS ARE IN INCHES
TOLERANCES:
FRACTIONAL ± 1/16
ANGULAR: MACH/BEND ± .5
TWO PLACE DECIMAL ±.01
THREE PLACE DECIMAL ±.004

MATERIAL
6063-T5 ALUMINUM

DO NOT SCALE DRAWING

	NAME	DATE
DRAWN	CG	6/21/2022
MARK		
QTY.	2	
FINISH	Dark Bronze Anodized	
DP	CW40	

COMMENTS:

RAM INDUSTRIES

TITLE:

SIZE A | DWG. NO. Applied TRIANGLE SDL S800-DETAILS | REV

SCALE: 1:26 | WEIGHT: 298.555 | SHEET 1 OF 1